WRITTEN DIMENSIONS ON THESE DRAWINGS SHALL HAVE PRECEDENCE OVER SCALED DIMENSIONS. CONTRACTOR SHALL VERIFY AND BE RESPONSIBLE FOR ALL DIMENSIONS AND CONDITIONS ON THE JOB. THE ENGINEER MUST BE NOTIFIED IMMEDIATELY IN WRITING OF ANY VARIATION FROM THE DIMENSIONS AND CONDITIONS SHOWN ON THESE DRAWINGS. FIELD VERIFY ALL CONDITIONS PRIOR TO LAYING OUT OR FABRICATING ASSOCIATED WORK. BRING TO THE ENGINEER'S ATTENTION ANY DEVIATION FROM DESIGNED CONDITIONS AND FIELD CONDITIONS PRIOR TO ORDERING MATERIALS AND INSTALLING WORK. ANY CONFLICTS WITH CONDITIONS AT NO ADDITIONAL COST TO THE OWNER. ENGINEER OR ENGINEER'S CONSULTANTS, SHOP DETAILS MUST BE SUBMITTED TO THE ENGINEER'S OFFICE AND REVIEWED BY THE ARCHITECT PRIOR TO ORDERING MATERIALS, FABRICATION AND CONSTRUCTION. ALL WORK SHALL BE PERFORMED IN ACCORDANCE WITH THE CURRENT EDITION OF THE CALIFORNIA BUILDING CODE AND ALL OTHER APPLICABLE CODES, LAWS, AND REGULATIONS. ALL WORK SHALL BE PERFORMED BY QUALIFIED WORKMEN IN A WORKMANLIKE MANNER. DO NOT SCALE DRAWINGS. USE ONLY WRITTEN DIMENSIONS. ALL DRAWINGS AND WORK PRODUCT THEREON, INCLUDING BUT NOT LIMITED TO ELECTRONIC FILES, ARE INSTRUMENTS OF SERVICE AND SHALL REMAIN THE PROPERTY OF THE ENGINEER. THE ENGINEER RETAINS ALL PATENT, COPYRIGHT, MORAL RIGHTS AND OTHER INTELLECTUAL PROPERTY RIGHTS IN THE DRAWINGS AND OTHER WORK PRODUCT PREPARED BY THE ENGINEER. ANY REPRODUCTION, DISTRIBUTION, OR USE OF THE DRAWINGS OR OTHER WORK PRODUCT PREPARED BY THE ENGINEER, IN WHOLE OR IN PART, WITHOUT THE ENGINEER'S PRIOR WRITTEN CONSENT IS PROHIBITED. THE ENGINEER FOR SOLE USE IN A WAIVER OF, OR TO BE DEEMED A WAIVER OF, THE ENGINEER'S RIGHTS IN ANY OF THE DRAWINGS OR OTHER WORK PRODUCT PREPARED BY THE ENGINEER. THE ENGINEER WILL NOT BE LIABLE FOR DAMAGES RESULTING FROM ANY CHANGES MADE IN THE DRAWINGS OR OTHER WORK PRODUCT PREPARED BY THE ENGINEER WITHOUT THE ENGINEER'S PRIOR WRITTEN CONSENT. THE ENGINEER'S RIGHTS SHALL BE PROTECTED TO THE FULLEST EXTENT OF THE LAW. THE OWNER AND ANY THIRD PARTY TO WHOM THE DRAWINGS OR OTHER WORK PRODUCT PREPARED BY THE ENGINEER IS PROVIDED, AGREE TO BE BOUND BY THE FOREGOING PROVISIONS. © 2019 PRADO ENGINEERING

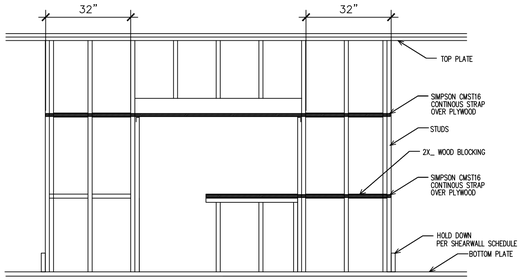

1 WINDOW AND DOOR OPENING IN SHEARWALL DETAIL
NTS

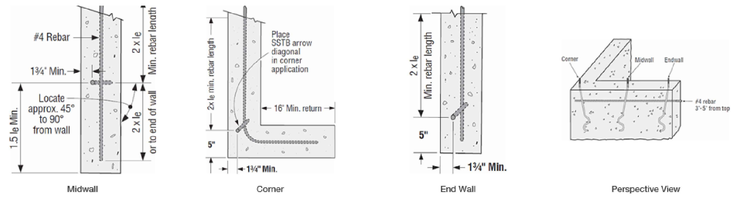

2 SSTB16 ANCHOR BOLT INSTALLATION
NTS

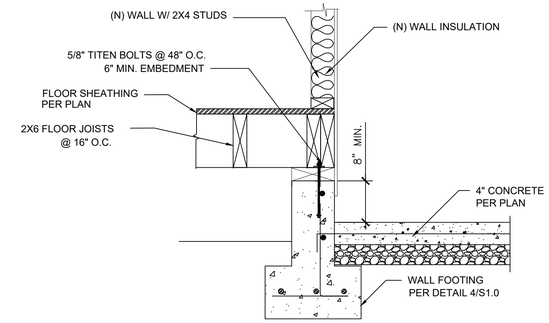

07 SLAB TO WALL FOOTING DETAIL
SCALE:

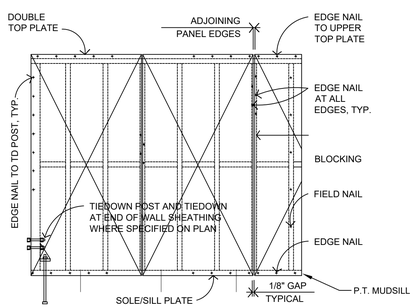

3 TYPICAL SHEAR WALL FRAMING DETAILS
NTS

6" or 4" O.C Nailing For Structural Shear Wall Panels Per Structural Plans

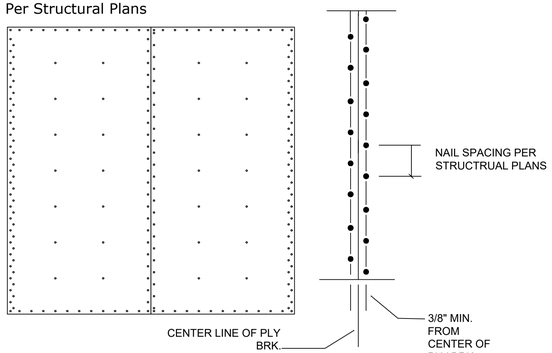

NOTE: Space panel edges ⅛ inch. Maintain a minimum of 3/8-inch from plywood panel edges to minimize plywood tear out. Stagger all nails at plywood panel edge.

4 SHEAR WALL NAILING PATTERN
NTS

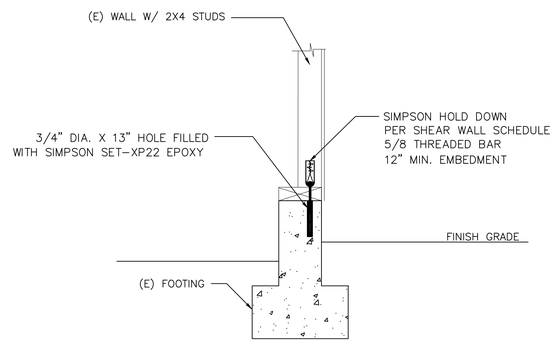

5 HOLD DOWN DETAIL IN (E) FOOTING
NTS

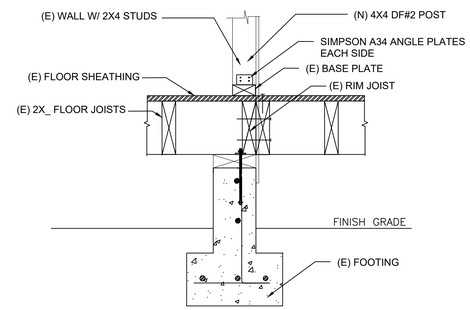

6 (N) POST TO (E) FOOTING DETAIL
NTS

TABLE R602.3(1)
FASTENING SCHEDULE

ITEM	DESCRIPTION OF BUILDING ELEMENTS	NUMBER AND TYPE OF FASTENER[a, b, e]	SPACING AND LOCATION
	Roof		
1	Blocking between ceiling joists or rafters to top plate	4-8d box ($2^1/_2$" × 0.113") or 3-8d common ($2^1/_4$" × 0.131"); or 3-10d box (3" × 0.128"); or 3-3" × 0.131" nails	Toe nail
2	Ceiling joists to top plate	4-8d box ($2^1/_2$" × 0.113"); or 3-8d common ($2^1/_4$" × 0.131"); or 3-10d box (3" × 0.128"); or 3-3" × 0.131" nails	Per joist, toe nail
3	Ceiling joist not attached to parallel rafter, laps over partitions [see Sections R802.3.1, R802.3.2 and Table R802.5.1(9)]	4-10d box (3" × 0.128"); or 3-16d common ($3^1/_2$" × 0.162"); or 4-3" × 0.131" nails	Face nail
4	Ceiling joist attached to parallel rafter (heel joint) [see Sections R802.3.1 and R802.3.2 and Table R802.5.1(9)]	Table R802.5.1(9)	Face nail
5	Collar tie to rafter, face nail or $1^1/_4$" × 20 ga. ridge strap to rafter	4-10d box (3" × 0.128"); or 3-10d common (3" × 0.148"); or 4-3" × 0.131" nails	Face nail each rafter
6	Rafter or roof truss to plate	3-16d box nails ($3^1/_2$" × 0.135"); or 3-10d common nails (3" × 0.148"); or 4-10d box (3" × 0.128"); or 4-3" × 0.131" nails	2 toe nails on one side and 1 toe nail on opposite side of each rafter or truss[i]
7	Roof rafters to ridge, valley or hip rafters or roof rafter to minimum 2" ridge beam	4-16d ($3^1/_2$" × 0.135"); or 3-10d common ($3^1/_4$" × 0.148"); or 4-10d box (3" × 0.128"); or 4-3" × 0.131" nails	Toe nail
		3-16d box $3^1/_2$" × 0.135"); or 2-16d common ($3^1/_2$" × 0.162"); or 3-10d box (3" × 0.128"); or 3-3" × 0.131" nails	End nail
	Wall		
8	Stud to stud (not at braced wall panels)	16d common ($3^1/_2$" × 0.162")	24" o.c. face nail
		10d box (3" × 0.128"); or 3" × 0.131" nails	16" o.c. face nail
9	Stud to stud and abutting studs at intersecting wall corners (at braced wall panels)	16d box ($3^1/_2$" × 0.135"); or 3" × 0.131" nails	12" o.c. face nail
		16d common ($3^1/_2$" × 0.162")	16" o.c. face nail
10	Built-up header (2" to 2" header with $^1/_2$" spacer)	16d common ($3^1/_2$" × 0.162")	16" o.c. each edge face nail
		16d box ($3^1/_2$" × 0.135")	12" o.c. each edge face nail
11	Continuous header to stud	5-8d box ($2^1/_2$" × 0.113"); or 4-8d common ($2^1/_4$" × 0.131"); or 4-10d box (3" × 0.128")	Toe nail
12	Top plate to top plate	16d common ($3^1/_2$" × 0.162")	16" o.c. face nail
		10d box (3" × 0.128"); or 3" × 0.131" nails	12" o.c. face nail
13	Double top plate splice for SDCs A-D_2 with seismic braced wall line spacing < 25'	8-16d common ($3^1/_2$" × 0.162"); or 12-16d box ($3^1/_2$" × 0.135"); or 12-10d box (3" × 0.128"); or 12-3" × 0.131" nails	Face nail on each side of end joint (minimum 24" lap splice length each side of end joint)
	Double top plate splice SDCs D_0, D_1, or D_2; and braced wall line spacing ≥ 25'	12-16d ($3^1/_2$" × 0.135")	

(continued)

TABLE R602.3(1)—continued
FASTENING SCHEDULE

ITEM	DESCRIPTION OF BUILDING ELEMENTS	NUMBER AND TYPE OF FASTENER[a, b, e]	SPACING AND LOCATION
14	Bottom plate to joist, rim joist, band joist or blocking (not at braced wall panels)	16d box ($3^1/_2$" × 0.135"); or 3" × 0.131" nails	16" o.c. face nail
		16d box ($3^1/_2$" × 0.128"); or	12" o.c. face nail
15	Bottom plate to joist, rim joist, band joist or blocking (at braced wall panel)	3-16d box ($3^1/_2$" × 0.135"); or 2-16d common ($3^1/_2$" × 0.162"); or 4-3" × 0.131" nails	3 each 16" o.c. face nail 2 each 16" o.c. face nail 4 each 16" o.c. face nail
16	Top or bottom plate to stud	4-8d box ($2^1/_2$" × 0.113"); or 3-16d box ($3^1/_2$" × 0.135"); or 4-8d common ($2^1/_4$" × 0.131"); or 4-10d box (3" × 0.128"); or 4-3" × 0.131" nails	Toe nail
		3-16d box ($3^1/_2$" × 0.135"); or 2-16d common ($3^1/_2$" × 0.162"); or 3-10d box (3" × 0.128"); or 3-3" × 0.131" nails	End nail
17	Top plates, laps at corners and intersections	3-10d box (3" × 0.128"); or 2-16d common ($3^1/_2$" × 0.162"); or 3-3" × 0.131" nails	Face nail
18	1" brace to each stud and plate	3-8d box ($2^1/_2$" × 0.113"); or 2-8d common ($2^1/_4$" × 0.131"); or 2-10d box (3" × 0.128"); or 2 staples $1^1/_4$"	Face nail
19	1" × 6" sheathing to each bearing	3-8d box ($2^1/_2$" × 0.113"); or 2-8d common ($2^1/_4$" × 0.131"); or 2-10d box (3" × 0.128"); or 2 staples, 1" crown, 16 ga., $1^3/_4$" long	Face nail
20	1" × 8" and wider sheathing to each bearing	3-8d box ($2^1/_2$" × 0.113"); or 3-8d common ($2^1/_4$" × 0.131"); or 3-10d box (3" × 0.128"); or 3 staples, 1" crown, 16 ga., $1^3/_4$" long	Face nail
		Wider than 1" × 8" 4-8d box ($2^1/_2$" × 0.113"); or 3-8d common ($2^1/_4$" × 0.131"); or 3-10d box (3" × 0.128"); or 4 staples, 1" crown, 16 ga., $1^3/_4$" long	
	Floor		
21	Joist to sill, top plate or girder	4-8d box ($2^1/_2$" × 0.113"); or 3-8d common ($2^1/_4$" × 0.131"); or 3-10d box (3" × 0.128"); or 3-3" × 0.131" nails	Toe nail
22	Rim joist, band joist or blocking to sill or top plate (roof applications also)	8d box ($2^1/_2$" × 0.113")	4" o.c. toe nail
		8d common ($2^1/_2$" × 0.131"); or 10d box (3" × 0.128"); or 3" × 0.131" nails	6" o.c. toe nail
23	1" × 6" subfloor or less to each joist	3-8d box ($2^1/_2$" × 0.113"); or 2-8d common ($2^1/_4$" × 0.131"); or 3-10d box (3" × 0.128"); or 2 staples, 1" crown, 16 ga., $1^3/_4$" long	Face nail

(continued)

TABLE 602.3(1)
FASTENING SCHEDULE—continued

ITEM	DESCRIPTION OF BUILDING ELEMENTS	NUMBER AND TYPE OF FASTENER[a, b, e]	SPACING AND LOCATION
	Floor		
24	2" subfloor to joist or girder	3-16d box ($3^1/_2$" × 0.135"); or 2-16d common ($3^1/_2$" × 0.162")	Blind and face nail
25	2" planks (plank & beam—floor & roof)	3-16d box ($3^1/_2$" × 0.135"); or 2-16d common ($3^1/_2$" × 0.162")	At each bearing, face nail
26	Band or rim joist to joist	3-16d common ($3^1/_2$" × 0.162") 4-10 box (3" × 0.128"), or 4-3" × 0.131" nails; or 4-3" × 14 ga. staples, $^7/_{16}$" crown	End nail
27	Built-up girders and beams, 2-inch lumber layers	20d common (4" × 0.192"); or	Nail each layer as follows: 32" o.c. at top and bottom and staggered.
		10d box (3" × 0.128"); or 3" × 0.131" nails	24" o.c. face nail at top and bottom staggered on opposite sides
		And: 2-20d common (4" × 0.192"); or 3-10d box (3" × 0.128"); or 3-3" × 0.131" nails	Face nail at ends and at each splice
28	Ledger strip supporting joists or rafters	3-16d box ($3^1/_2$" × 0.135"); or 3-16d common ($3^1/_2$" × 0.162"); or 4-10d box (3" × 0.128"); or 4-3" × 0.131" nails	At each joist or rafter, face nail
29	Bridging to joist	2-10d (3" × 0.128")	Each end, toe nail
ITEM	**DESCRIPTION OF BUILDING ELEMENTS**	**NUMBER AND TYPE OF FASTENER[a, b, e]**	**SPACING OF FASTENERS**
			Edges (inches)[j] / **Intermediate supports[c, g] (inches)**
	Wood structural panels, subfloor, roof and interior wall sheathing to framing and particleboard wall sheathing to framing (see Table R602.3(3) for wood structural panel exterior wall sheathing to wall framing)		
30	$^3/_8$" – $^1/_2$"	6d common (2" × 0.113") nail (subfloor, wall)[f] 8d common (2$^1/_2$" × 0.131") nail (roof)	6 / 12[f]
31	$^{19}/_{32}$" – 1"	8d common nail ($2^1/_2$" × 0.131")	6 / 12[f]
32	$1^1/_8$" – $1^1/_4$"	10d common (3" × 0.148") nail; or 8d ($2^1/_2$" × 0.131") deformed nail	6 / 12
	Other wall sheathing[g]		
33	$^1/_2$" structural cellulosic fiberboard sheathing	$1^1/_2$" galvanized roofing nail, $^7/_{16}$" head diameter, or 1" crown staple 16 ga., $1^1/_4$" long	3 / 6
34	$^{25}/_{32}$" structural cellulosic fiberboard sheathing	$1^3/_4$" galvanized roofing nail, $^7/_{16}$" head diameter, or 1" crown staple 16 ga., $1^1/_4$" long	3 / 6
35	$^1/_2$" gypsum sheathing[d]	$1^1/_2$" galvanized roofing nail; staple galvanized, $1^1/_2$" long; $1^1/_4$" screws, Type W or S	7 / 7
36	$^3/_8$" gypsum sheathing[d]	$1^1/_2$" galvanized roofing nail; staple galvanized, $1^3/_8$" long; $1^1/_4$" screws, Type W or S	7 / 7
	Wood structural panels, combination subfloor underlayment to framing		
37	$^3/_4$" and less	6d deformed (2" × 0.120") nail; or 8d common ($2^1/_2$" × 0.131") nail	6 / 12
38	$^7/_8$" – 1"	8d common ($2^1/_2$" × 0.131") nail; or 8d deformed ($2^1/_2$" × 0.120") nail	6 / 12
39	$1^1/_8$" – $1^1/_4$"	10d common (3" × 0.148") nail; or 8d deformed ($2^1/_4$" × 0.120") nail	6 / 12

For SI: 1 inch = 25.4 mm, 1 foot = 304.8 mm, 1 mile per hour = 0.447 m/s; 1 ksi = 6.895 MPa.

(continued)

TABLE R602.3(1)—continued
FASTENING SCHEDULE

a. Nails are smooth-common, box or deformed shanks except where otherwise stated. Nails used for framing and sheathing connections shall have minimum average bending yield strengths as shown: 80 ksi for shank diameter of 0.192 inch (20d common nail), 90 ksi for shank diameters larger than 0.142 inch but not larger than 0.177 inch, and 100 ksi for shank diameters of 0.142 inch or less.
b. Staples are 16 gage wire and have a minimum $^7/_{16}$-inch on diameter crown width.
c. Nails shall be spaced at not more than 6 inches on center at all supports where spans are 48 inches or greater.
d. Four-foot by 8-foot or 4-foot by 9-foot panels shall be applied vertically.
e. Spacing of fasteners not included in this table shall be based on Table R602.3(2).
f. Where the ultimate design wind speed is 130 mph or less, nails for attaching wood structural panel roof sheathing to gable end wall framing shall be spaced 6 inches on center. Where the ultimate design wind speed is greater than 130 mph, nails for attaching panel roof sheathing to intermediate supports shall be spaced 6 inches on center for minimum 48-inch distance from ridges, eaves and gable end walls; and 4 inches on center to gable end wall framing.
g. Gypsum sheathing shall conform to ASTM C1396 and shall be installed in accordance with GA 253. Fiberboard sheathing shall conform to ASTM C208.
h. Spacing of fasteners on floor sheathing panel edges applies to panel edges supported by framing members and required blocking and at floor perimeters only. Spacing of fasteners on roof sheathing panel edges applies to panel edges supported by framing members and required blocking. Blocking of roof or floor sheathing panel edges perpendicular to the framing members need not be provided except as required by other provisions of this code. Floor perimeter shall be supported by framing members or solid blocking.
i. Where a rafter is fastened to an adjacent parallel ceiling joist in accordance with this schedule, provide two toe nails on one side of the rafter and toe nails from the ceiling joist to top plate in accordance with this schedule. The toe nail on the opposite side of the rafter shall not be required.

1 NO-CHANGE

CONSULTANT

PRADO ENGINEERING
3505 GLENWOOD DR.
FAIRFIELD CA 94533
TEL. (415) 889-0878

SEAL

REGISTERED PROFESSIONAL ENGINEER ALAN W. B. PRADO No. 066562 Exp. 6/30/20 CIVIL STATE OF CALIFORNIA

PROJECT TITLE

1-STORY RESIDENTIAL BUILDING ADDITION

APN #: 01102420150000

ADDRESS

2508 59TH STREET
SACRAMENTO, CA. 95817

OWNER

MICHAEL BENSION
MR SOLUTIONS LLC

ADDRESS

2508 59TH STREET
SACRAMENTO, CA. 95817

INFO REVISIONS

#	DATE	DESCRIPTION
1	06/05/2020	PER COMMENTS DATED 02/03/2020

DATE:

DRAWN BY : JLV
CHECKED BY : JLV, ABP
DATE : 07/31/2019

SHEET #

S3.0

JOB NUMBER : 13032

PHASE : 000% APPROVED BY OWNER: